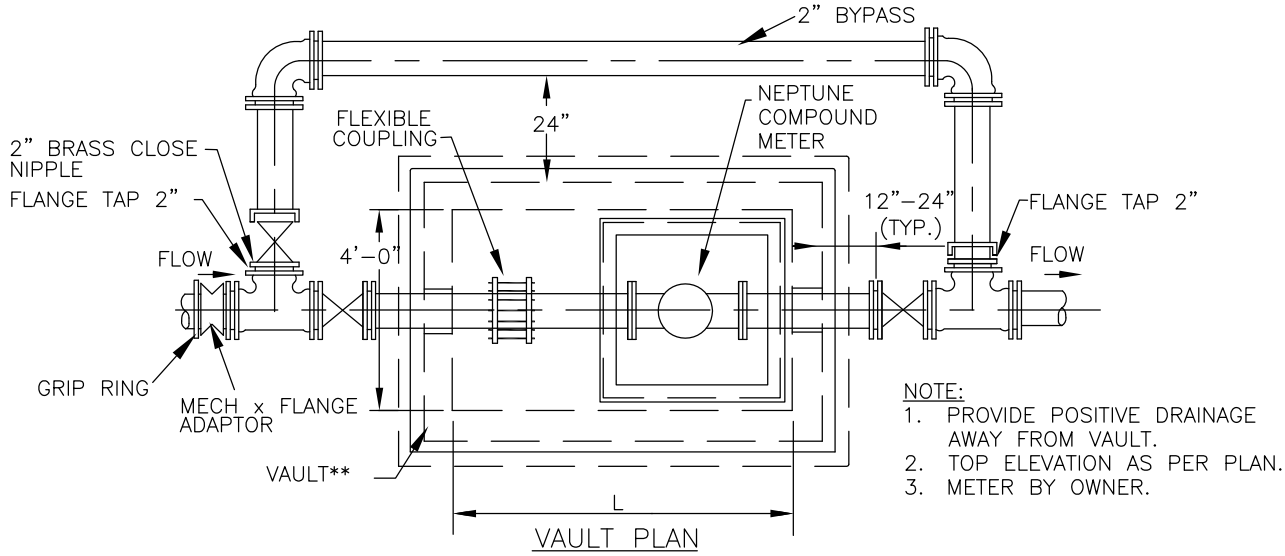

VAULT PLAN

2" BYPASS (SIZE OF BYPASS TO BE DETERMINED BY ENGINEER).
2–2" COMPRESSION x I.P. MALE #H15428–2"
2–2" COMPRESSION x COMPRESSION 90° EL. # H15526–2"
1–2" SQUARE NUT GATE VALVE # AMERICAN FLOW CONTROL PIPE=H.D.P.E C.T.S

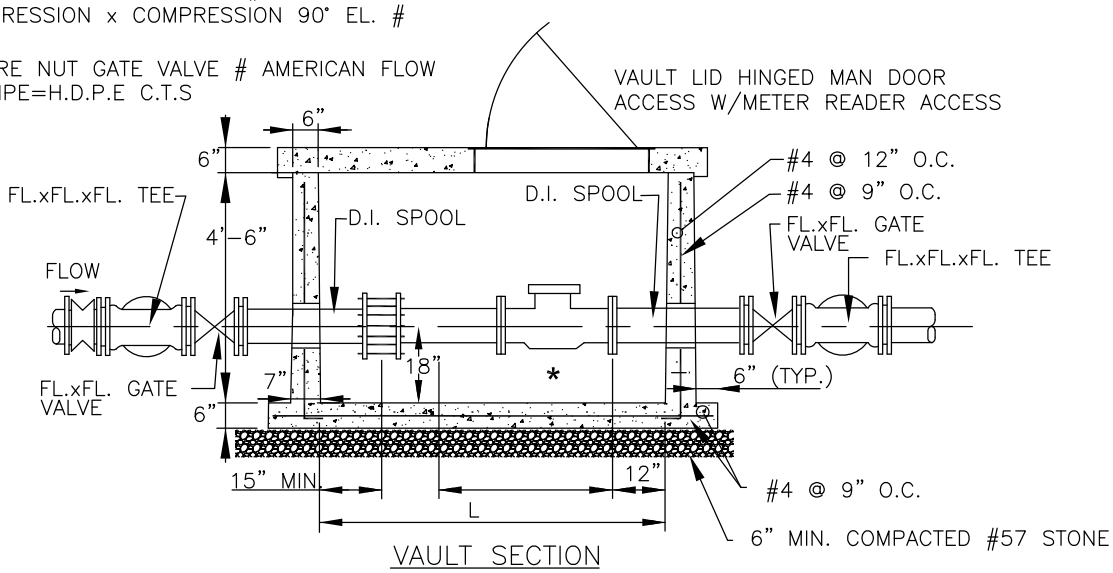

VAULT SECTION

VAULT** MINIMUM 1 FT. CLEARANCE ON FLANGED ENDS AND SIDES OF 3" & 4" METERS .
MINIMUM 2 FT. CLEARANCE ON FLANGED ENDS AND SIDES OF 6" AND LARGER METERS.
VAULT TO HAVE ATTACHED LADDER IF OVER 3' DEEP WITH 3' REMOVABLE SECTION THAT WILL EXTEND ABOVE VAULT LID.
METER TO BE SET 18" FROM TOP OF LID.
METER READER ACCESS DOOR TO BE CENTERED EVER METER REGISTER.
FLOOR TO HAVE DRAIN OR SUMP PUMP MAINTAINED BY CUSTOMER.
VAULT TO BE SET AT FINISHED GRADE.
*METER MIN.1' ABOVE BOTTOM OF VAULT
CONCRETE PAD AROUND GATE VALVE BOXES, SEE W–1

City of Astoria **Public Works Department** **1095 Duane Street**	**3 to 10 Inch Water Service Detail**		
	Date Adopt. 11/01/12	**Date Rev.** ----	DWG. NO. **W-5**
	Dwg. Name: W–5 3 to 10 Inch Water Service.dwg		